t600 – ELASTIC COUPLING

Description

The t600 is designed for test bed operation for passenger cars and light duty vehicles. This coupling is characterized by its low weight, high damping and low maintenance requirements.

Naming

The product is named according to the following convention:

t600-tttt-cccc-CVxx

- joint size
- dynamic stiffness [Nm/rad]
- nominal torque [Nm]
- product name

Example: t600-350-600-CV05

Benefits

- lightweight design
- low torsional stiffness
- high damping
- low maintenance

Operating Range

Torque: up to 2200 Nm
Speed: up to 10000 rpm

Function

As with all tectos drive shaft systems, the t600 follows a modular design principle, which separates the different functions.

The elastic part of the drive shaft connection is used for torque transmission and to decouple and damp the torsional vibrations. The optimized shape leads to a precisely defined stress state under load.

The inner ring is exactly positioned in relation to the outer ring because the bearing is inside the coupling. This means that only rotations are transmitted by the elastomer.

The stable outer ring allows the elastomer to provide excellent support against centrifugal forces.

The standard t600 specifications cover a nominal torque range of 100 - 2200 Nm for a torsional stiffness of 280 - 5300 Nm/rad.

Coupling	Joint	T_{KN} [Nm]	c_{Tdyn} [Nm/rad]	T_{Kmax} [Nm]	T_{KW} [Nm]	n_{max} [rpm]	m [kg]	x_s [mm]	J_1 [kgm²]	J_2 [kgm²]	Ψ [-]
t600-100-280	CV05	100	280	300	33	10000	2.18	35.8	4.13E-03	6.71E-04	0.4
t600-350-600	CV05	350	600	1000	110		2.68	40.9	5.03E-03	1.28E-03	
	CV15	350	600	1000	110		2.87	41.3	5.53E-03	1.75E-03	
t600-500-850	CV05	500	850	1500	165		3.81	42.0	1.09E-02	2.66E-03	
	CV15	500	850	1500	165		3.89	41.2	1.24E-02	3.03E-03	
t600-700-1800	CV15	700	1800	2000	230		5.81	55.5	1.98E-02	4.69E-03	
t600-1600-3800	CV15	1600	3800	4000	500		9.03	59.4	5.01E-02	2.07E-02	
t600-2200-5300	CV15	2200	5300	5500	690		10.28	64.2	5.77E-02	2.68E-02	
	CV21	2200	5300	5500	690		10.41	64.0	6.44E-02	2.70E-02	

T_{KN} - Nominal torque[9]
c_{Tdyn} - Torsional stiffness
T_{Kmax} - Maximum torque
T_{KW} - Maximum alternating torque
n_{max} - Maximum speed
m - Mass
x_s - Center of gravity flange-side
J_1 - Inertia flange-side
J_2 - Inertia shaft-side
Ψ - Relative damping

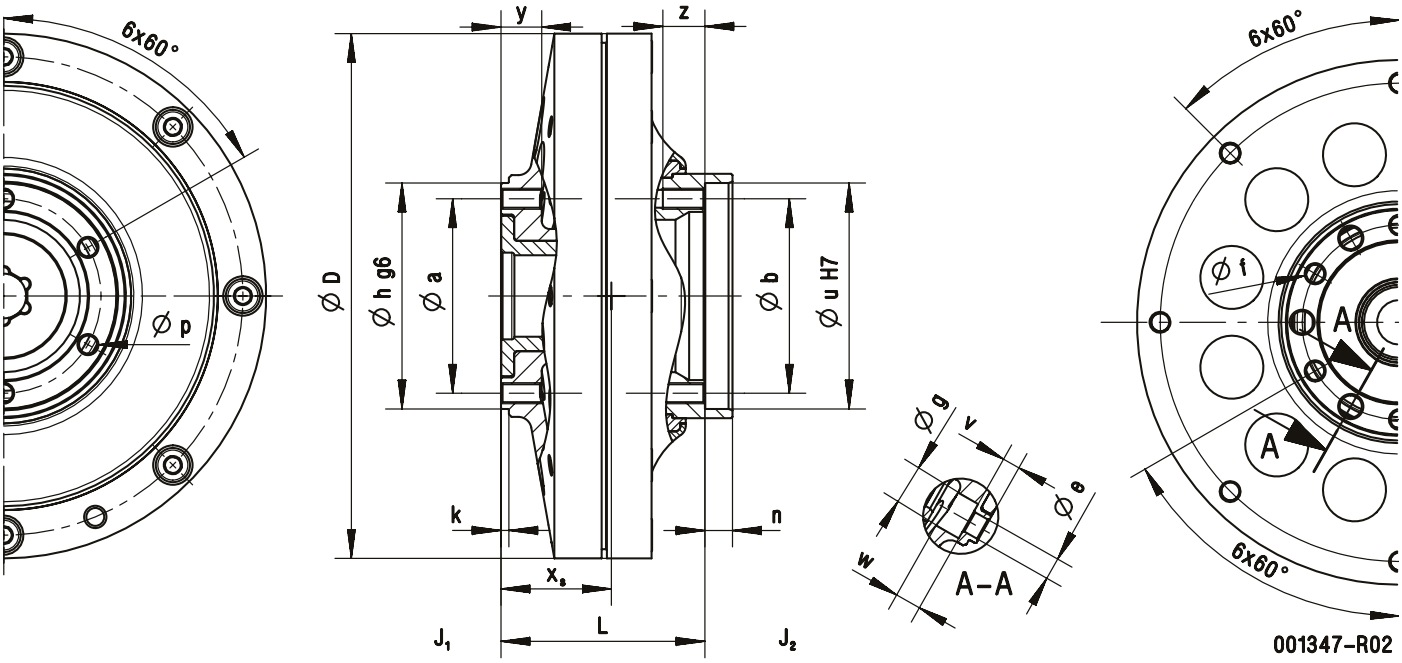

Coupling	Joint	D [mm]	L [mm]	a [mm]	b [mm]	e [mm]	f [-]	g [mm]	h (g6) [mm]	k [mm]	n [mm]	p [-]	u (H7) [mm]	v [mm]	w [mm]	y [mm]	z [mm]
t600-100-280	CV05	142	81.0	74	74	8.4	M8	15	86	5	10.5	M8	86	8.6	8.8	17.4	33.7
t600-350-600	CV05	162	92.7	74	74	8.4	M8	15	86	5	10.5	M8	86	9.7	5.8	15.5	17.0
	CV15	162	94.7	94	94	10.5	M10	18	108	5	4.5	M10	108	8.2	7.5	17.0	25.2
t600-500-850	CV05	200	92.7	74	74	8.4	M8	15	86	5	10.5	M8	86	6.7	8.8	15.5	23.0
	CV15	200	94.7	94	94	10.5	M10	18	108	5	4.5	M10	108	8.5	7.5	15.5	21.0
t600-700-1800	CV15	200	126.8	94	94	10.5	M10	18	108	5	4.5	M10	108	8.5	7.5	15.5	20.0
t600-1600-3800	CV15	304	126.8	94	94	10.5	M10	18	108	5	4.5	M10	108	11.2	10.8	22.0	25.0
t600-2200-5300	CV15	304	126.8	94	94	10.5	M10	18	108	5	4.5	M10	108	11.2	10.8	22.0	23.0
	CV21	304	126.8	108	108	13.0	M12	20	128	6	5.5	M12	128	14.0	8.0	22.0	30.0

Other dimensions available on request

[9] The nominal torque must be equal to or greater than the maximum combustion engine torque